FRL
AC, BC
AFC, BFC
AF, BF
AR, BR
AFR, BFR
AL, BL
JAC
JAF
JAR
JAW
JAL
PTH
JAD

BR (2000～4000) AR2000 AR2000

Ordering Code

BR	-	3000
Model		Port Size
AR : Small		1500: G 1/8″
		2000: G 1/4″
BR : Medium		3000: G 3/8″
		4000: G 1/2″

Symbol

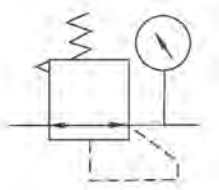

Specification

Model	AR1500	AR2000	BR2000	BR3000	BR4000
Operating Fluid	Air				
Port Size	G 1/8″	G 1/4″	G 1/4″	G 3/8″	G 1/2″
Range of Adjustable Pressure	0.05～0.85 MPa				
Max. Adjustable Pressure	0.95 MPa				
Ensured Pressure Resistance	1.5 MPa				
Operating Temperature Range	5～60 ℃				
Weight	0.20 KG		0.23 KG		
Body Material	Aluminum, Die-casting Forming				

Overall Dimension

AR

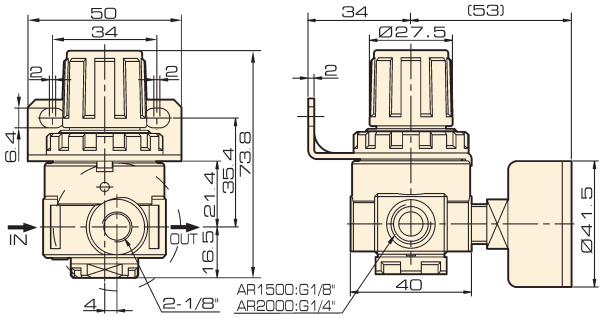
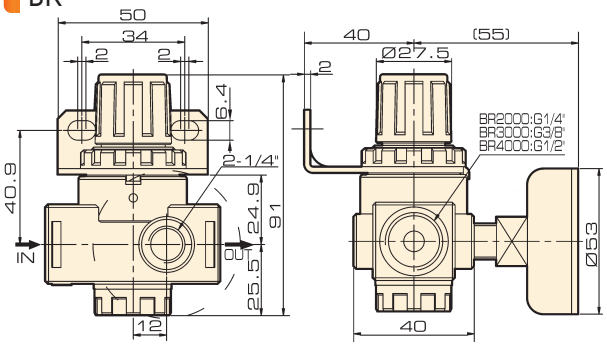
BR